DK-6 Box Maker

Instructions manual

V-1.1-EN, 2024-SEP-09

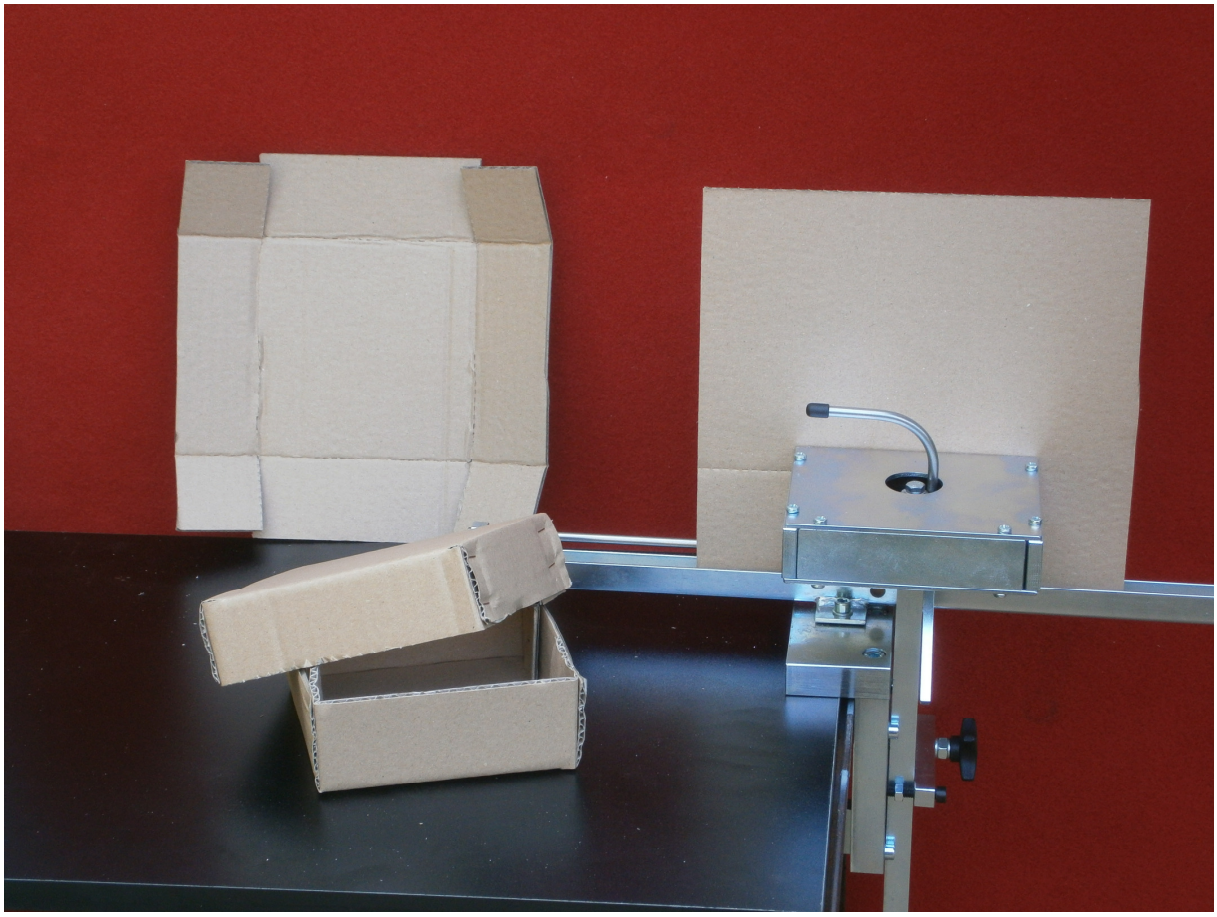

Application of the Box Maker

- The Box Maker is designed for making boxes from corrugated paper specified in the “Parameters” section of this document.
- You can cut, slit, and perforate corrugated paper between the ranges specified in the “Parameters” section of this document.

Warning

- Prior to the Box Maker utilization, definitely read all instructions.
- The Box Maker is designed only for cutting, slitting, and perforating corrugated paper between the ranges specified in the “Parameters” section of this document.
- Cutting, slitting, or perforating other materials can damage the Box Maker and may result injury.
- To reduce the risk of injury, an inspection shall be essential, if the Box Maker utilized in the vicinity of children.
- The Box Maker should be mounted to a table which is strong enough to hold the Box Maker safely.

Parameters

Dimensions, assembled: (L x W x H)	740 x 20 x 740 mm
Package dimensions: (L x W x H)	22 x 16 x 780 mm
Netto weight:	16 kg
Brutto weight:	18 kg
Maximum corrugated paper thickness:	7mm
Maximum distance between the edge of sheet and the cutting/perforation:	450mm
Minimum distance between the edge of sheet and the cutting/perforation:	50mm
Back paper stop setting range:	25-350mm
Cutting knife type:	Olfa MCB-1
Perforating knife type:	Paperfox PK-24-25

Parts of the Box Maker

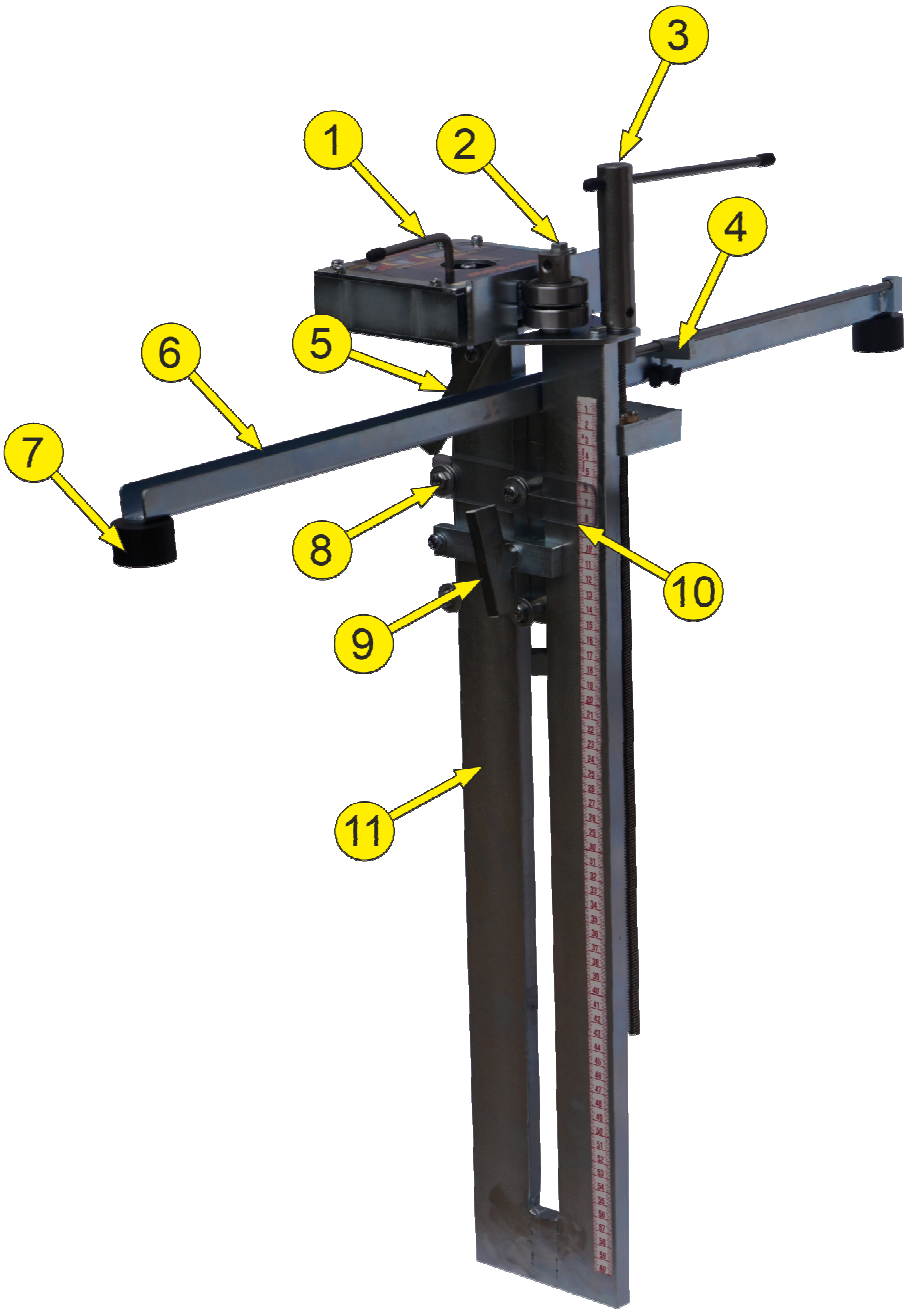

1. Tool change arm. After raising the tool locking arm (5), this arm can be rotated to change the cutting / perforating tool.
2. Eccentric shaft of the paper supporting bearings. After loosening its fixing screw, the depth of cutting/perforating can be adjusted by rotating shaft.
3. Operating arm of the cutting size adjustment mechanism. After loosening the fixing screw (9), the cutting/perforating position can be adjusted by rotating this arm.

4. Paper stop for adjusting the length of the slots. When it is not needed, it can be folded up.
5. Tool locking arm. It fixes the rotatable tool changer.
6. Paper guide channel. This part is not installed on the machine when delivered. With the plastic knob removed, the rail can be inserted into the machine and then fixed with two screws. After installation, place back the plastic knob on the guide channel to avoid injuries.
7. Plastic knob. The front plastic knob is to prevent injuries, the rear one ensures the stability of the device.
8. Indicator fixing screw. Once loosened, the indicator transparent plastic plate can be adjusted to show the exact cut size.
9. Fixing screw. Loosen it when adjusting the size, otherwise keep it tight.
10. Plastic indicator plate. It shows the adjusted size on the centimetre scale.
11. Machine body. Solid steel structure.

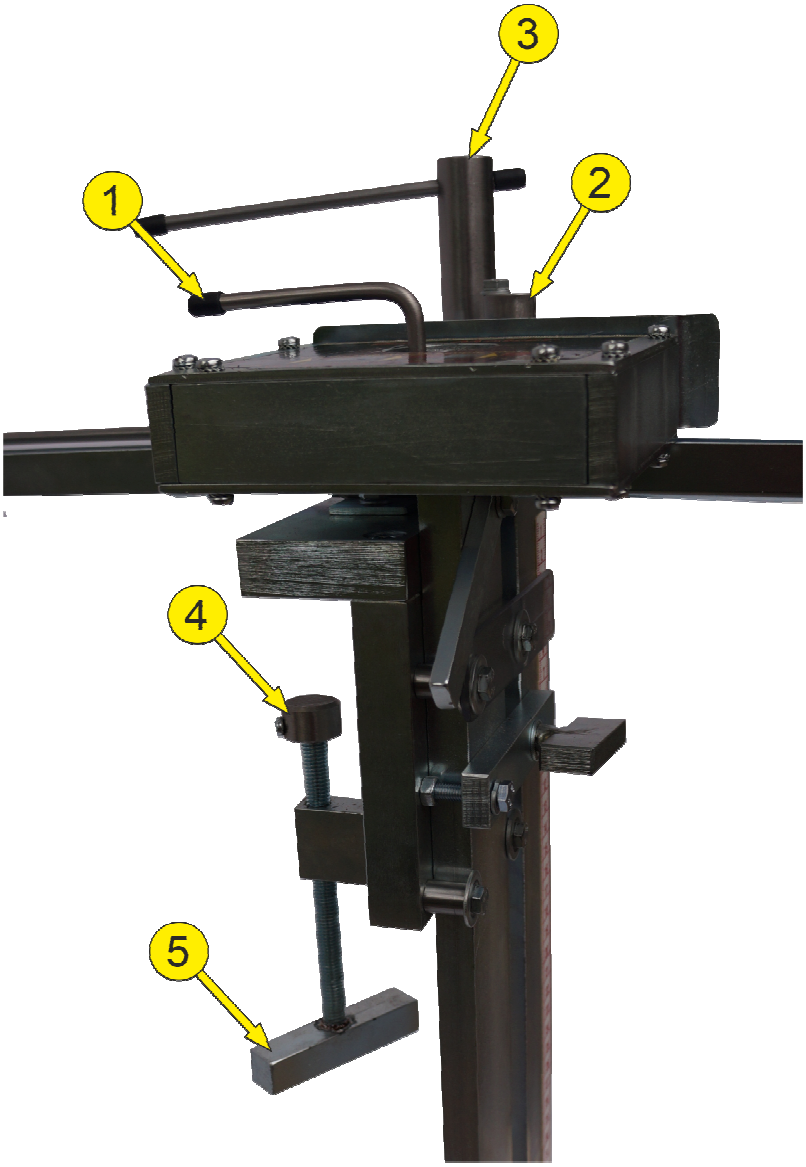

1. Tool change arm. After raising the tool locking arm (5), this arm can be rotated to change the cutting / perforating tool.
2. Eccentric shaft of the paper supporting bearings. After loosening its fixing screw, the depth of cutting/perforating can be adjusted by rotating shaft.
3. Operating arm of the cutting size adjustment mechanism. After loosening the fixing screw (9), the cutting/perforating position can be adjusted by rotating this arm.
4. Table clamp. Widely adjustable clamping mechanism for attaching the device to a table.
5. Fixing arm.

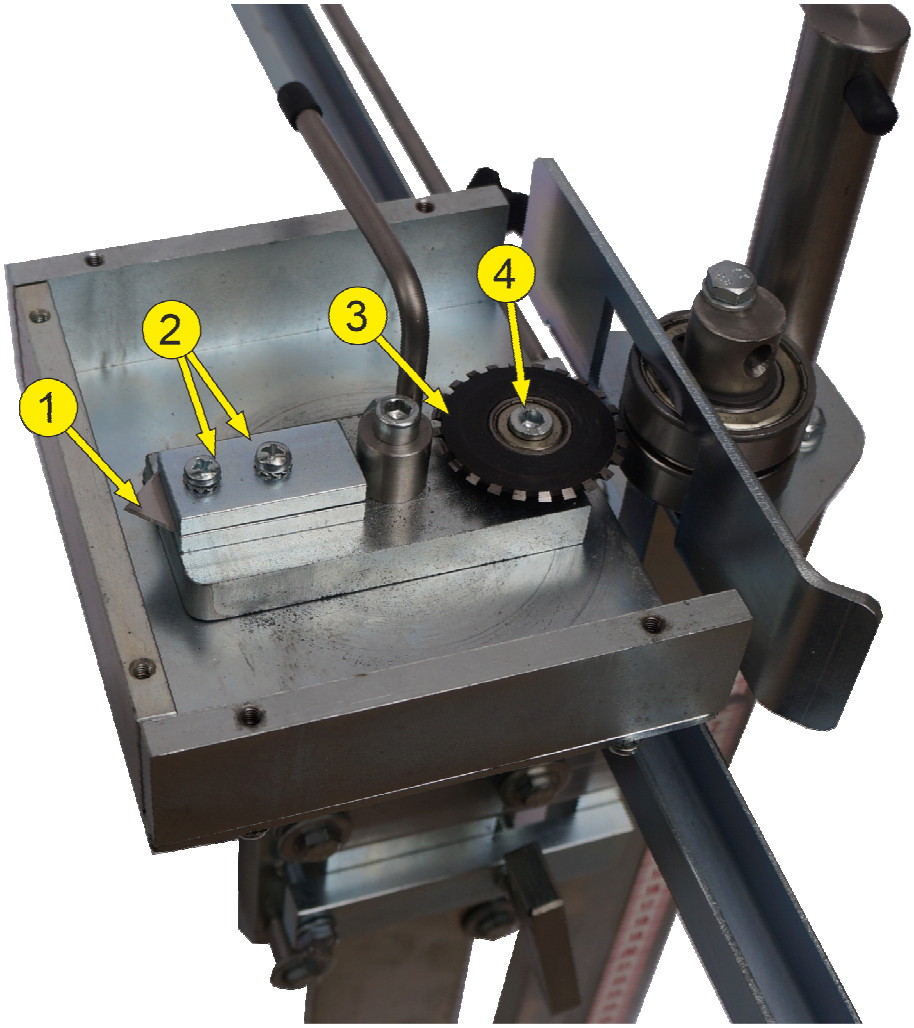

1. Knife. We suggest using Olfa MCB-1 knife.
2. Knife fixing screws.
3. Perforating knife. Instead of a perforating knife, a creasing tool can be installed. We recommend the use of a perforating tool, because its adjustment is not so sensitive to the properties of the corrugated paper to be processed.
4. Fixing screw of the perforating knife. Always put an M6 washer under the knife.

Assembling the Box Maker

The paper guide channel is delivered with the Box Maker disassembled. To fix the paper guide channel on the you should remove a plastic knob from the end of the guide channel, and you can mount it on to the device with two M6 screws. Do not forget to assemble the plastic knob again, because it is mounted on the channel to avoid the risk of injury caused by the edge of the channel.

Mounting the Box Maker on a table

You can fix the Box Maker on a table which is strong enough to hold the device during operation.

Simple place the device on the edge of the table and fix it with the mounting screw.

Setting the distance of cutting/perforating from the edge of the sheet

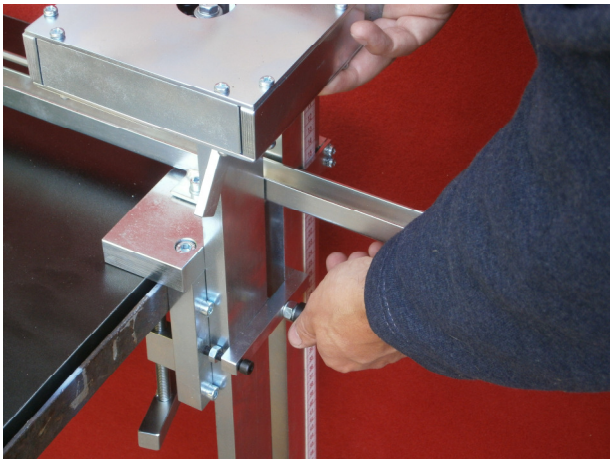

Hold the knife covering box and loose the scale fixing screw. Now you can move the steel frame up and down. Select the desired position with the help of the scale and fix the scale fixing screw.

Make sure that this screw is fixed well, because the loose steel frame can fall down and it may cause injury.

Selecting the perforating or cutting tool.

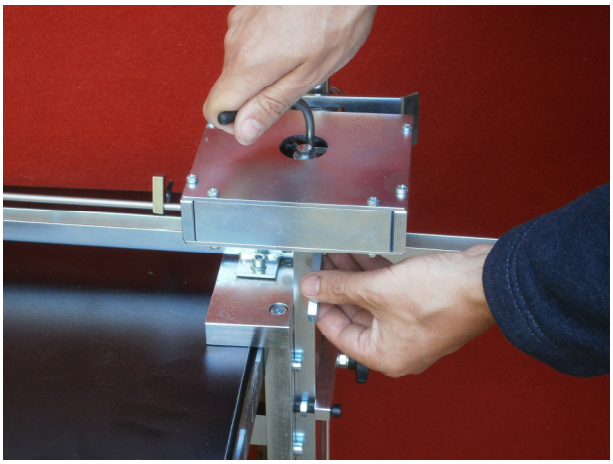

The Box Maker has a revolver head with a perforating and a cutting knife. You can select the desired tool with loosing the tool fixing arm and turning the tool changing arm into the proper position.

The tool changing arm can be turned only 180 degrees, it has two positions it can't be turned around.

Setting the depth of the cutting/perforation

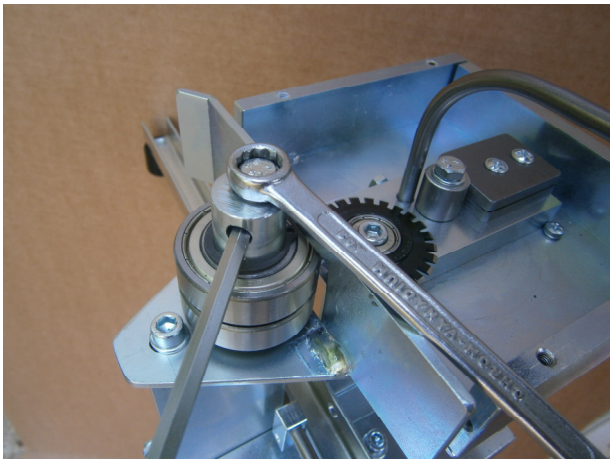

Not all corrugated paper is the same, so you sometimes have to set the depth of the perforation so that the box could be folded easily, but the corrugated paper won't break when folding.

Loose the M6 fixing screw of the eccentric axle of the paper supporting bearings and with the help of a hexagon tool or a screw driver turn it so as it needed. You don't have to open the lid of the knife covering box for this operation as in this picture.

Setting the adjustable paper stop

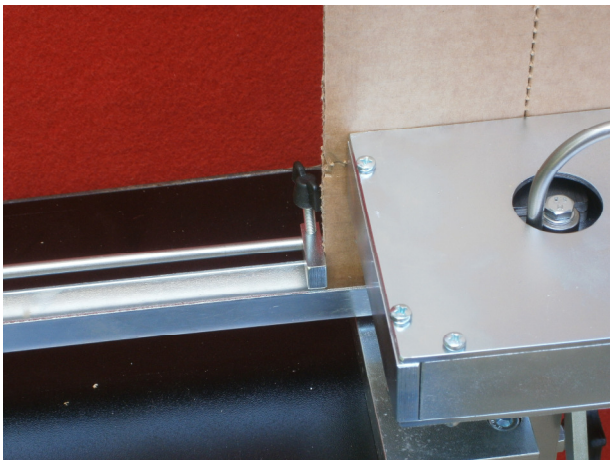

If you want to cut or perforate the sheet not in the whole width, you can set the paper stop into the proper position to limit the cutting/perforating length. Loose the M5 manual screw and set the paper stop into the proper position. Fix the M5 screw again.

If you want to cut/perforate the sheet in the whole width again, you don't have to remove this setting. Simply turn the paper stop up, so that the whole width could be perforated/cutted again.

Cutting with the Box Maker

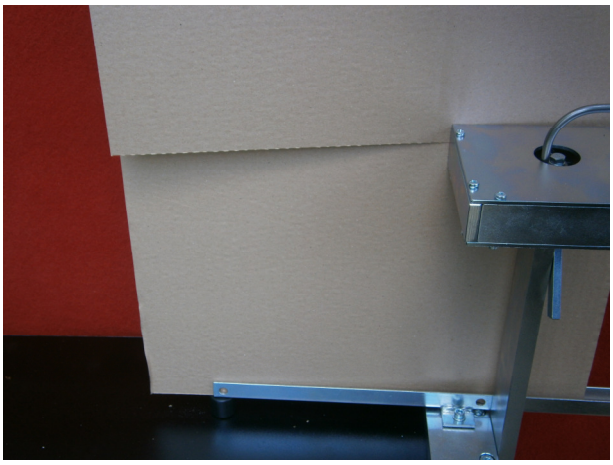

Select the cutting tool, set the desired cutting position and push a sheet through the Box Maker as in the picture.

Perforating with the Box Maker

Select the perforating tool, set the desired perforation position and push a sheet through the Box Maker as in the picture.

If the perforation is not deep enough or it is too deep then you can set the depth of the perforation so that the corrugated paper could be folded easily, but it wouldn't break during folding.

Slotting with the Box Maker

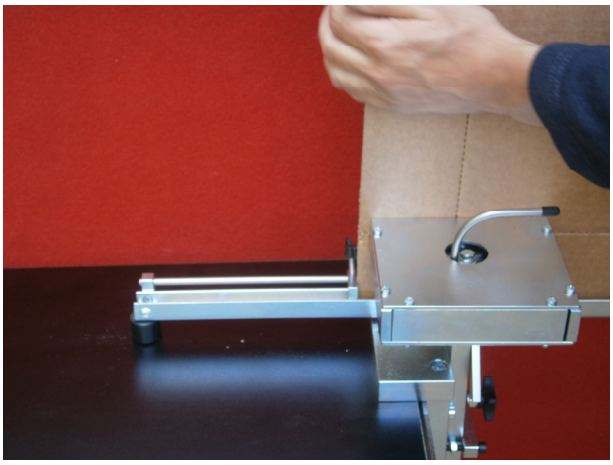

Select the cutting tool, set the position of cutting and set the paper stop so that it should limit the cutting length to the desired size.

Push the sheet into the device as in the picture. When the sheet pushed to the paper stop pull it back.

Making “telescopic” boxes with the Box Maker

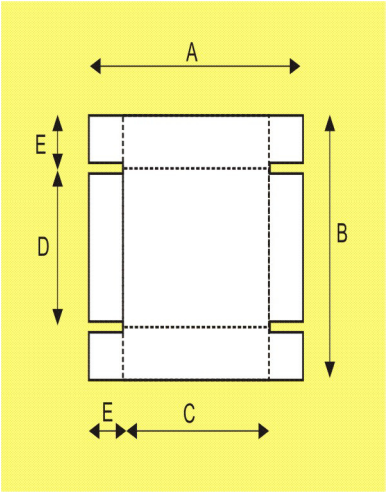

You can use your Box Maker for cutting, slitting, perforating, slotting and for a lot of other purposes, but the main function of this device is the box making. The simplest box you can manufacture with this device is a so called telescopic box. This box has a bottom and s top part.

Booth part is likes as in the picture, but the top part a bit wider so that it could slipped on to the bottom one.

You can use a same size of corrugated paper (AxB) for booth part, and the perforation position (E) can be set to a bit differently.

First cut the corrugated paper into the desired size. (A x B)

Select the cutting tool and push through the sheet on the Box Maker.

Select the perforating tool, set the perforation position (E) and perforate all the 4 side of the sheet.

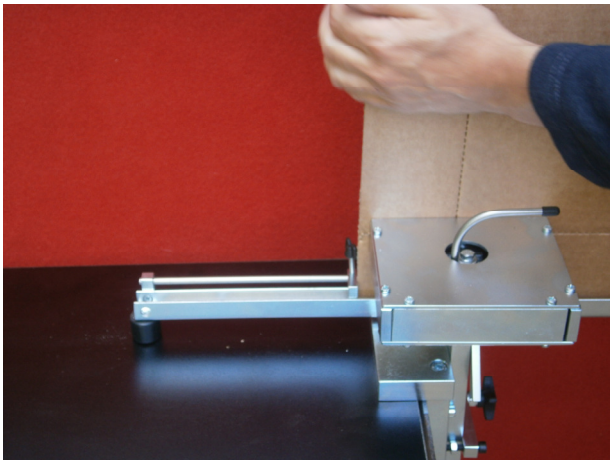

Select the cutting tool, and set the cutting depth with the paper stop. The cutting position is the same as the perforation position so you don't need to set this position again.

Prepare the 4 slots.

Your half-ready box should look like as the one on the picture.

Staple the corners of the box.

For thinner corrugated papers you can use a simple stapler for this purpose.

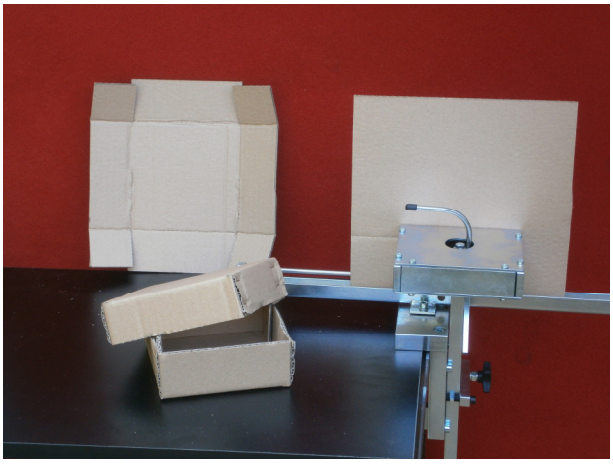

Your “telescopic” box is ready.

Making other boxes with the Box Maker

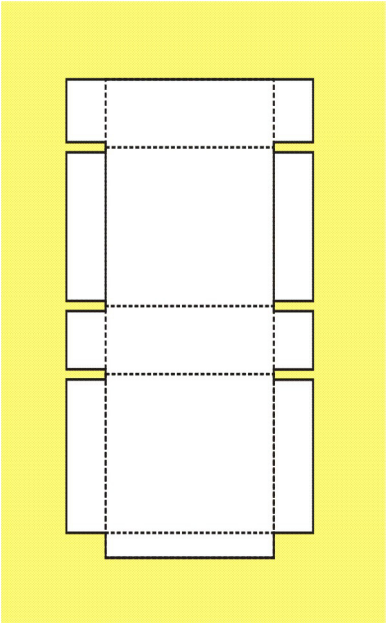

You can make simple slotted boxes with your Box Maker as well.

The process is very similar as with the telescopic boxes, but you have to make more setting during manufacturing these boxes.

Replacing the knives

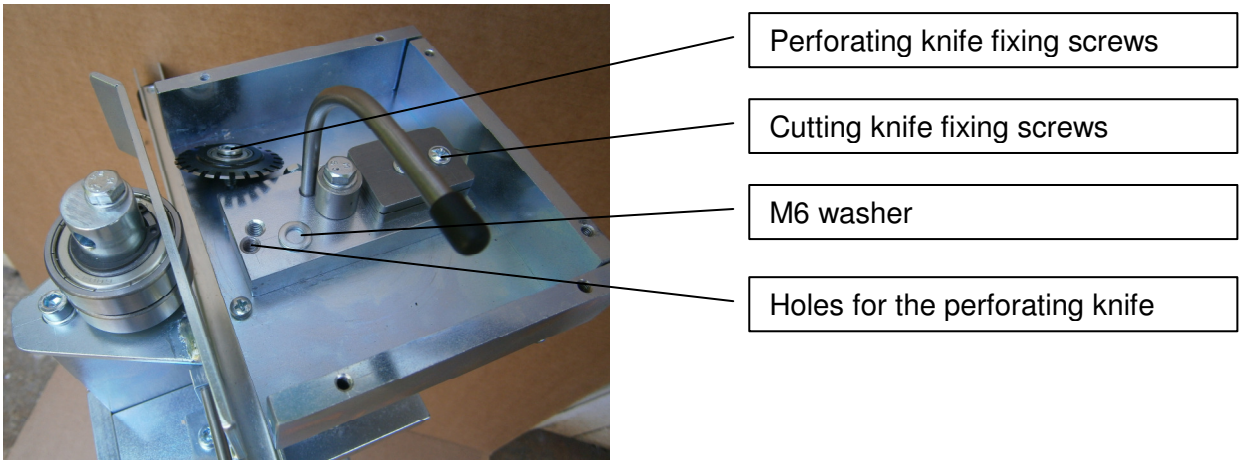

The perforating knife has a long life time, so presumably it doesn't have to be replaced. There are two threaded holes for this knife. If you can't set the proper perforating depth with the eccentric shaft of the paper supporting bearings, then you can screw the fixing screw of the perforating knife to the other threaded hole. Do not forget to put the M6 washer under the perforating round knife.

The cutting knife could be replaced after removing the two M4 fixing screws. Be careful, this knife is very sharp.